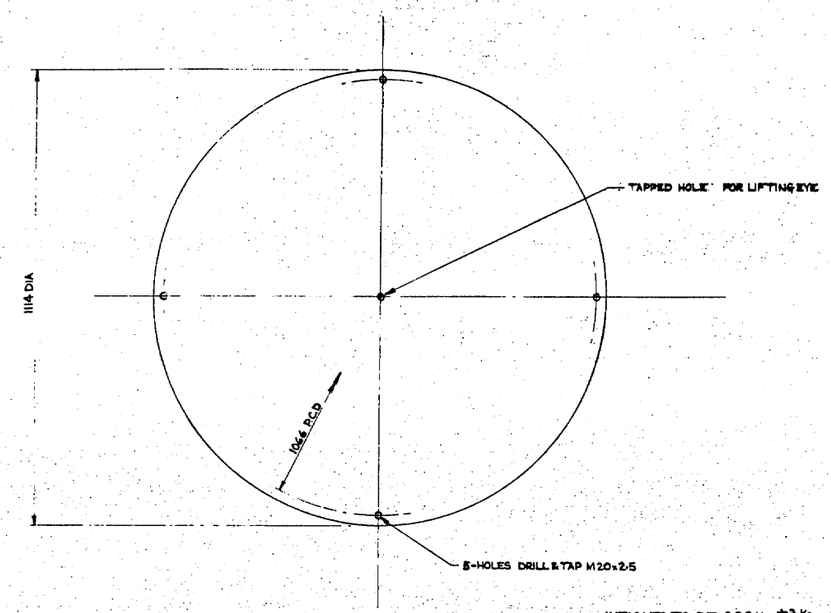

WEIGHT TO BE 382 Kg ±3 Kg & SYMETRICAL.

IF WEIGHT UNDER TOLERANCE SCREW PLATE TO SURFACE TO BRING WEIGHT UP. IF WEIGHT OVER TOLERANCE DRILL HOLES IN PLATE TO BRING WEIGHT DOWN.

DATE OF MOD / MODIFIED BY	DATE OF MOD / MODIFIED BY	FIRST MADE ORD No. 118660	MATERIAL 50mm Thk Plate to Certificate
		FIRST ISSUE DATE 22-4-82	FINISH Paint Matt Black
		COST ACCOUNT 205	PATT No.
DATE OF MOD / MODIFIED BY	DATE OF MOD / MODIFIED BY	TITLE F11 Secondary Mirror Dummy Mass	
		WEIGHT Sees Above / No. OFF PER SET 1	SCALE 1/5 / UNIT No. TC1 205 03 / ISSUE A

DATE OF MOD / MODIFIED BY	DATE OF MOD / MODIFIED BY	FIRST MADE ORD No. 118660	MATERIAL 1½" Chromed Steel Bar to B.S.970 Gr. 817M40 (En 19)
		FIRST ISSUE DATE 22-4-82	FINISH Hardened.
		COST ACCOUNT 205	PATT No.
DATE OF MOD / MODIFIED BY	DATE OF MOD / MODIFIED BY	TITLE Spacer	
		WEIGHT 0-98 Kg / No. OFF PER SET 4	SCALE 1/1 / UNIT No. TC1 205 04 / ISSUE A

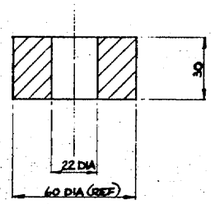

DATE OF MOD / MODIFIED BY	DATE OF MOD / MODIFIED BY	FIRST MADE ORD No. 118660	MATERIAL 1½" Chromed Steel Bar to B.S.970 Gr. 817M40 (En 19)
		FIRST ISSUE DATE 22-4-82	FINISH Hardened.
		COST ACCOUNT 205	PATT No.
DATE OF MOD / MODIFIED BY	DATE OF MOD / MODIFIED BY	TITLE Clamping Washer	
		WEIGHT 0-154 Kg / No. OFF PER SET 4	SCALE 1/1 / UNIT No. TC1 205 05 / ISSUE A

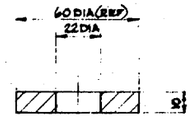

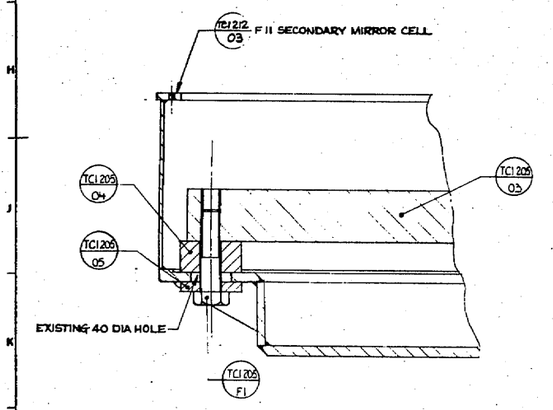

SECTION THRO' MIRROR CELL
TYPICAL 4-PLACES

DATE OF MOD / MODIFIED BY	DATE OF MOD / MODIFIED BY	FIRST MADE ORD No. 118660	MATERIAL
		FIRST ISSUE DATE 22-4-82	FINISH
		COST ACCOUNT 205	PATT No.
DATE OF MOD / MODIFIED BY	DATE OF MOD / MODIFIED BY	TITLE Assy of F11 Secondary Mirror Dummy Mass	
		WEIGHT — / No. OFF PER SET 1	SCALE 1/2 / UNIT No. TC1 205 ASSY. / ISSUE A

A merger of Clarke Chapman and Reyrolle Parsons

SURFACE FINISH EQUIVALENTS: MICROINCHES 4 8 16 32 63 125 250 500 / MICROMETRES 1 2 4 8 16 32 63 125 — THIS DRAWING CONFORMS TO B.S. 308

SURFACE FINISH SYMBOLS: ✓ DENOTES NOT NECESSARILY MACHINED; ▽ DENOTES MACHINED

WELD SYMBOLS TO BS 499 PART 2 1969

FABRICATION TOLERANCES: DIMENSIONS UP TO 250 ±2·0; DIMENSIONS FROM 250 TO 2500 ±3·0; ANGLES ±1:600; STRAIGHTNESS/FLATNESS 1:600

THIS DRAWING IS THE PROPERTY OF NEI PARSONS LTD. AND MUST NOT BE COPIED OR DISCLOSED TO A THIRD PARTY WITHOUT GRUBB PARSONS WRITTEN CONSENT.

GENERAL MACHINING TOLERANCES (EXCEPT WHERE STATED OTHERWISE): UNSPECIFIED DIMENSIONS ±0·5; DIMENSIONS WITH ONE DECIMAL PLACE ±0·2; DIMENSIONS WITH — OVER AND DECIMAL PLACE ±0·1

ALL DIMENSIONS ARE IN MILLIMETRES. ANGLES ±. SCREW THREADS TO B.S. 3643 PART 2 MEDIUM FIT. MACHINED DIA CONCENTRIC TO 0·1 T.I.R.

PROJECTION 3rd. ANGLE | CHECKED 22-4-82 | APPROVED 22-4-82 | DRAWN A BROWN | DATE 22-4-82

GRUBB PARSONS NEWCASTLE UPON TYNE NE6 2YB

TITLE ASSY & DETAILS OF F11 SECONDARY MIRROR DUMMY MASS

SCALE — | DRAWING NUMBER TC1 205 ASSEMBLY & DETAILS 03 TO 05 | ISSUES — | SHEET — OF —

AS BUILT DRAWINGS
This drawing shows all revisions to the unit